Shenzhou-12

Print on Cardstock (110 lbs)

1 cm

1 inch

1:100 Scale

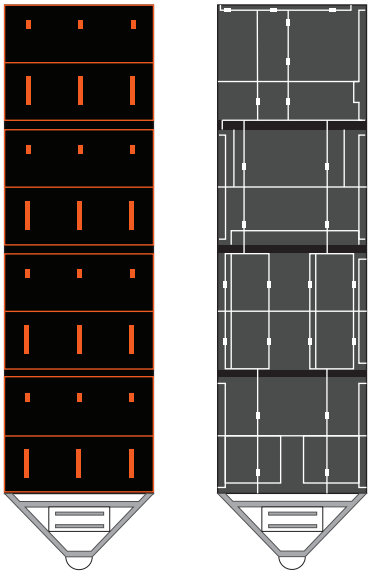

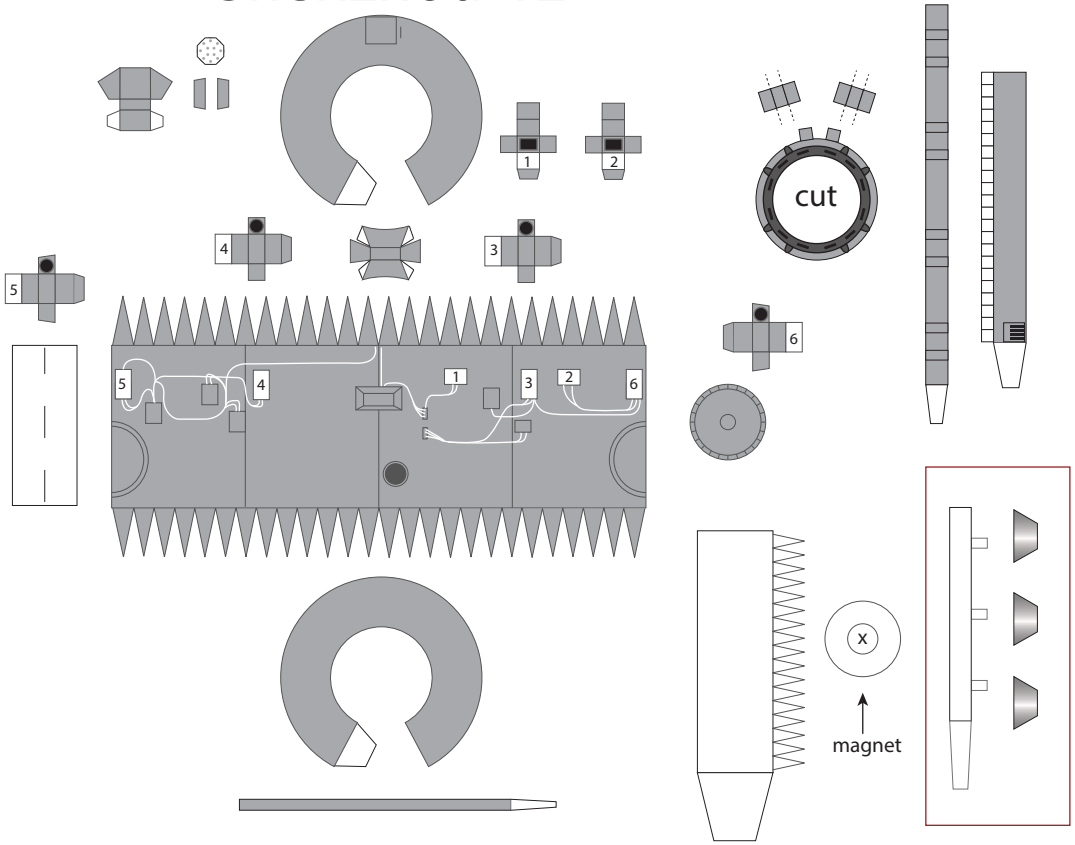

Solar panels reference from Vincent Meens

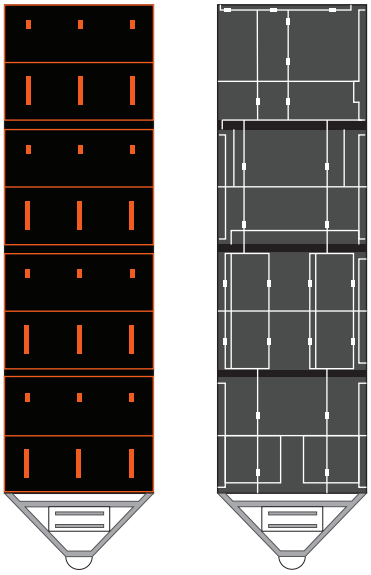

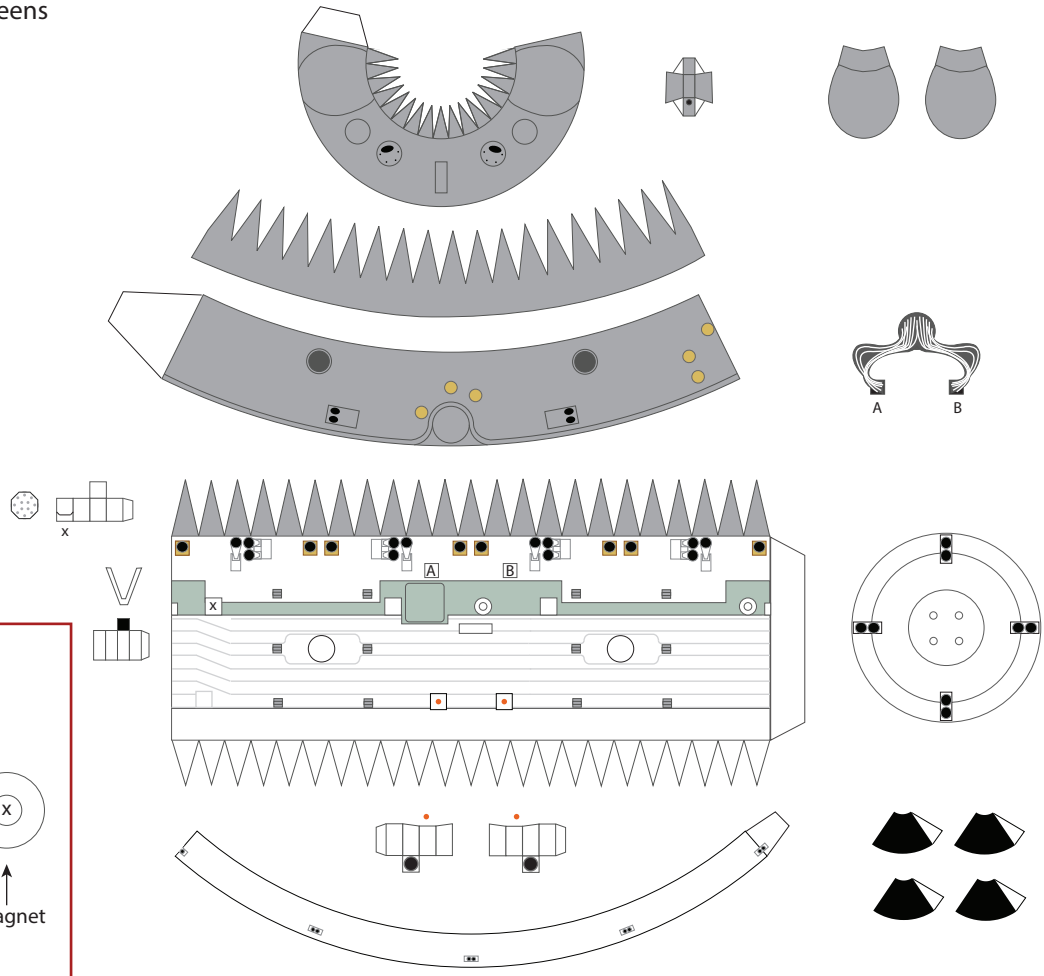

Tianhe docking ring

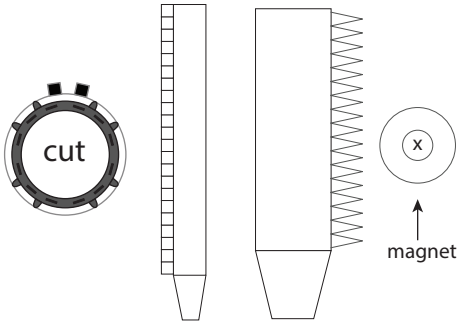

©2021 Not for commercial use